TEFCOLD
COOL PRODUCTS WORLDWIDE

# 60012 / Fast 60M

| Position | ItemNo | Description |
|---|---|---|
| 1.01 | 56921 | Top panel |
| 1.03 | 60131 | Support Bracket |
| 1.04 | 59766 | Door gasket 570x321mm |
| 1.05 | 59770 | Closure Pin Entry |
| 1.06 | 59769 | Door Shaft Nut 29X18 MM |
| 1.07 | 59771 | Lever Nut Entry |
| 1.08 | 57027 | Door |
| 1.09 | 59868 | Door Pivot |
| 1.10 | 59806 | DOOR HINGE |
| 1.11 | 59821 | Hinge Pin 7.80X10X38.20 MM |
| 1.12 | 59768 | Door Guide Shaft 500F |
| 1.14 | 57028 | FRONT PANEL |
| 1.18 | 56940 | Rubber Cap Ø 12 |
| 1.19 | 60156 | Cable Gland Di9/De16 22 |
| 1.20 | 60168 | Rubber Grommet DE. 34 |
| 2.01 | 59858 | Pressure switch |
| 2.04 | 62433 | Sleeve |
| 2.08 | 59857 | Resistance 2100W 230V |
| 2.09 | 59990 | Resistance Gasket 45x20 MM |
| 2.10 | 59801 | Contact Thermostat Tank 95°C |
| 2.11 | 59846 | Contact Thermostat 127°C |
| 2.12 | 59323 | O-ring Ø 58x6 mm |
| 2.13 | 63760 | BOILER RESISTOR 3000W 230V |
| 2.14 | 59895 | Resistance Protection |
| 2.15 | 59864 | Probe Support 185 MM |
| 2.17 | 63768 | TUBE SENSOR 400 MM |
| 2.20 | 59748 | Filter with Stainless Steel Weight Tube Ø4x6mm |
| 2.21 | 59974 | Tube 4X6 U61 (Order by Meters) |
| 2.22 | 59863 | Tube 6X10 MM Fittings Ferrules |
| 2.23 | 59838 | DETERGENT DISPENSER |
| 2.24 | 59834 | Detergent Injection Tank Fitting |
| 2.25 | 59867 | HOOD |
| 2.26 | 59970 | Flat Gasket Ø 22x13 MM |
| 2.27 | 63793 | O-Ring Gasket Ø 13 MM |
| 2.28 | 59971 | Hood Pressure Switch Fitting |
| 2.30 | 56920 | Adhesive control interface |
| 2.31 | 56950 | Flat data cable GET 50 LA 50 |
| 2.32 | 59855 | Command Keypad |
| 2.34 | 56969 | Spacer M3 RIVER 81 |
| 2.35 | 57004 | Electrical board |
| 2.36 | 59840 | Fuse 250V |
| 2.39 | 56904 | Contactor 230V |
| 2.42 | 56941 | Embossed Key White Ø 20.65 MM H.13.20 MM |
| 2.43 | 59874 | Push Button Body |
| 2.44 | 59794 | Double Diverter 50F |
| 2.45 | 63765 | Tripolar Push Button Switch 250V 16A |
| 2.46 | 59961 | Plastic Nut 5.50X6.30X3.30 MM |
| 2.47 | 59830 | Wheel |
| 2.54 | 67528 | TANK GROUP CAPTURE OF RESISTANCE |
| 2.58 | 63761 | Contact Thermostat 90°C |
| 3.02 | 67489 | DISPOSITIVE DVGW LA500 USA |
| 3.03 | 59754 | Pressure Tube TP 10X16 (sold by meters) |
| 3.06 | 59931 | BOILER LA50 |
| 3.07 | 59871 | Suction/Discharge Body LA500 |
| 3.08 | 59876 | Suction Sleeve |
| 3.09 | 63778 | O-Ring Gasket Ø 145X5.2 MM |
| 3.10 | 62413 | Pump Elbow |
| 3.11 | 59711 | Wash Collector |

TEFCOLD®
COOL PRODUCTS WORLDWIDE

# 60012 / Fast 60M

| | | |
|---|---|---|
| 3.12 | 63782 | Flat Gasket 75x57x2 MM |
| 3.13 | 59916 | Tube Fixing Nut 75x55 mm |
| 3.14 | 59935 | Drain Filter Ø190x100mm |
| 3.15 | 59924 | O-Ring Gasket Ø 35X2.6 MM |
| 3.16 | 59923 | Overflow Ø 35X200 MM |
| 3.17 | 59837 | Collector |
| 3.20 | 59839 | Rinse aid dispenser |
| 3.21 | 60130 | Tube |
| 3.22 | 59980 | Pressure Tube Ø 5X11 MM (by meters) |
| 3.23 | 69135 | Cuff |
| 3.24 | 59748 | Filter with Stainless Steel Weight Tube Ø4x6mm |
| 3.25 | 59905 | Drain Pipe |
| 3.27 | 59959 | Gasket 40X29X1.5 MM |
| 3.28 | 69146 | Washing arm support |
| 3.29 | 59734 | Gasket |
| 3.31 | 56960 | Suction Body Grill |
| 6.01 | 59733 | Fixed Duct Ferrule |
| 6.02 | 59873 | Plastic Gasket Ø 44X40X3 MM |
| 6.06 | 70156 | Wash and Rinse Arm |
| 6.15 | 59916 | Tube Fixing Nut 75x55 mm |
| 6.16 | 63782 | Flat Gasket 75x57x2 MM |
| 6.17 | 59711 | Wash Collector |
| 6.18 | 59880 | Central Tank Filter 530x200x20mm |
| 6.19 | 59881 | Side Tank Filter 530x210x25mm |
| 7.01 | 60004 | PUMP LGB LA500 470W 230V 50Hz |
| 7.02 | 59865 | WASHING PUMP 60 HZ |
| 7.03 | 60208 | Pump Impeller |
| 7.07 | 63769 | Retainer |
| 7.08 | 63773 | Impeller ∅87.70 mm |
| 7.10 | 59898 | O-Ring Gasket Ø 110 MM |
| 7.14 | 60046 | Electro pump coil |

*2026-01-16*

TEFCOLD
COOL PRODUCTS WORLDWIDE

# 60012 / Fast 60M

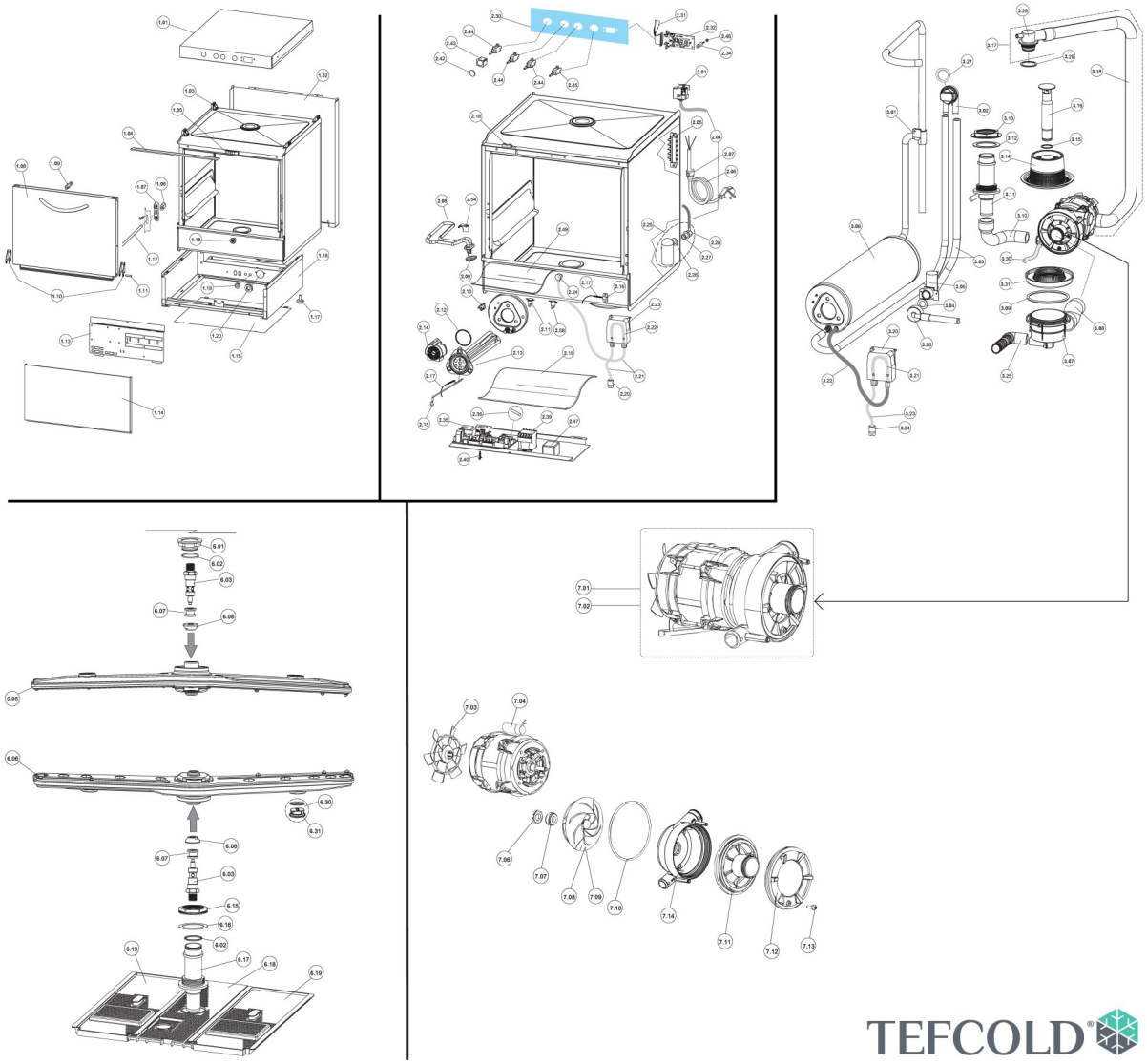

TEFCOLD