TECHNICAL FILE **2023** elettrobar Viale Europa, 24 - 37045 S.Pietro Di Legnago (Vr) - Italy

Model	**Fast 30**
Code Production	917400

Interface :





Overall Dimension (Width-Depth-Height) *open	mm	401x490(765*)x595
Packaging Dimension (WxDxH)	mm	560x470x740
Gross weight	Kg	30
Net weight	Kg	27
Volume	mc	0,19
Rack size	mm	350x350
Max door /hood opening	mm	260
Max glasses/plate Height	mm	250
General construction		single skin
Door/hood Construction		double skin
Tank construction		welded
Tank volume	liter	7
Tank heating element	W	600
Tank surface strainers		Yes-composite
Wash pump type		single flow
Wash pump power	W	150
Wash temperature	°C	60
Boiler type		pressurized
Boiler volume	liter	2,6
Back-flow system		Valve
Boiler heating element	W	2600
Rinse booster pump		NO
Rinse booster pump power	W	-
Rinse temperature	°C	65
Rinse water consumption	Liter /rack	1,6
Optimal external water pressure	bar	2 - 4
Drain system		overflow
Drain filter		double filtering
Drain pump		optional
Rinse aid dispenser	peristaltic	YES
Detergent dispenser	peristaltic	optional
Wash cycle	sec	90 - 120
Special cycle	programs	-
Self cleaning cycle		YES
Electric Power	W	3.500
Electric Connection	V - ph - Hz	230V 1N 50Hz
Fuse	A	16
Water softner		NO
Plates racks	n°-	NO
Flat Rack	n°2	780138
Support for saucers	n°-	NO
Cutterly Rack	n°1	780139
Electric cable	n°1	YES
Drain hose	n°1	YES
Fill hose	n°1	YES

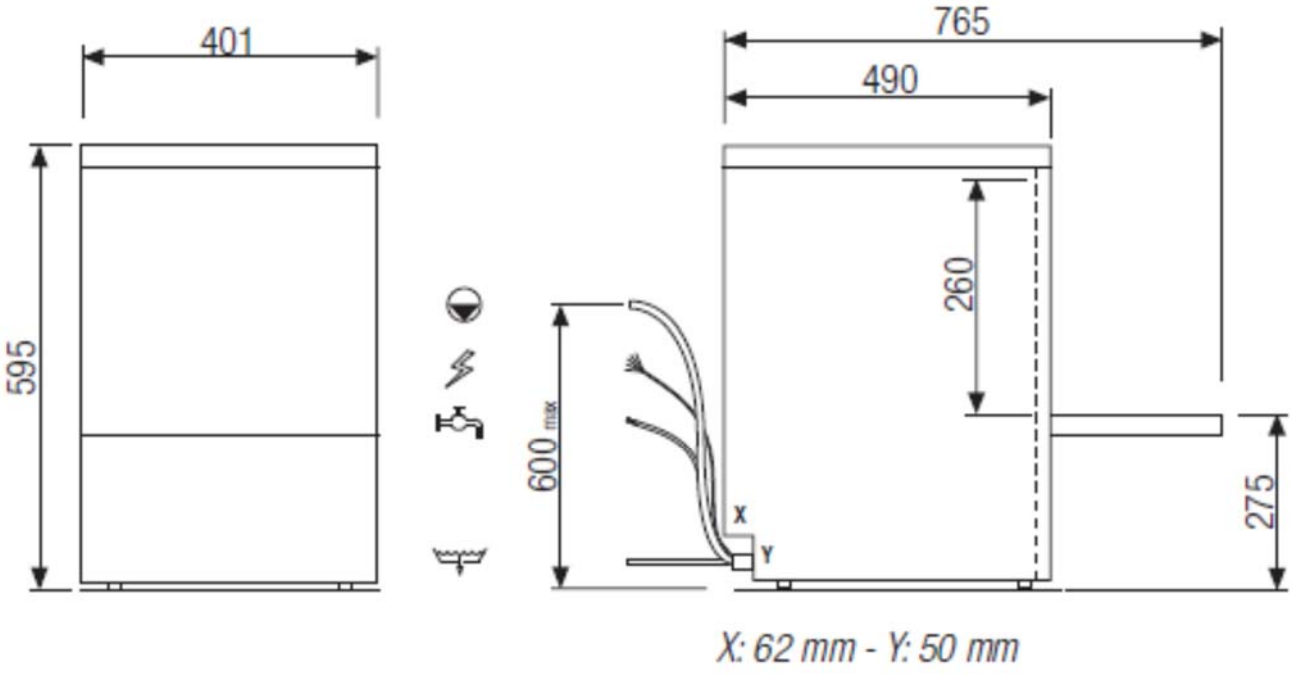

X: 62 mm - Y: 50 mm