TEFCOLD
COOL PRODUCTS WORLDWIDE

60018 / FAST 30

Position	ItemNo	Description
1.02	57050	Rear Panel LA350
1.03	63748	Door Guide 400F
1.04	56915	Door Guide Plate
1.05	60118	Left hinge 400F
1.06	60117	Right hinge 400F
1.07	57040	Hinge Cap 400F
1.08	60043	Door gasket 395mm
1.10	60259	Door Lock E35
1.12	56940	Rubber Cap Ø 12
1.13	60154	Electrical Components Support
1.14	57051	Front Panel LA350
1.15	56928	Hexagonal Foot
1.16	60156	Cable Gland Di9/De16 22
1.17	60153	Lower Base Protection LA350
1.18	59827	Tap
1.20	60152	Cable Gland DI28/DE39
2.01	56919	Flat cable 10p 2100mm
2.02	59855	Command Keypad
2.03	59961	Plastic Nut 5.50X6.30X3.30 MM
2.04	56969	Spacer M3 RIVER 81
2.06	59858	Pressure switch
2.07	60147	Terminal block
2.08	59970	Flat Gasket Ø 22x13 MM
2.10	62433	Sleeve
2.11	63793	O-Ring Gasket Ø 13 MM
2.12	59971	Hood Pressure Switch Fitting
2.15	59852	Heater
2.16	59990	Resistance Gasket 45x20 MM
2.17	60149	Electrical Protection 410x245 SP0.13
2.18	59801	Contact Thermostat Tank 95°C
2.19	63783	O-Ring Gasket Ø 50X5.5 MM
2.20	63788	BOILER RESISTOR 2600W 230V
2.21	59864	Probe Support 185 MM
2.22	63768	TUBE SENSOR 400 MM
2.23	59846	Contact Thermostat 127°C
2.24	59834	Detergent Injection Tank Fitting
2.25	59974	Tube 4X6 U61 (Order by Meters)
2.27	59748	Filter with Stainless Steel Weight Tube Ø4x6mm
2.28	59838	DETERGENT DISPENSER
2.29	59863	Tube 6X10 MM Fittings Ferrules
2.33	57004	Electrical board
2.36	59840	Fuse 250V
2.38	60148	Transparent Electrical Protection 44
2.41	67528	TANK GROUP CAPTURE OF RESISTANCE
2.45	59794	Double Diverter 50F
2.46	63765	Tripolar Push Button Switch 250V 16A
2.47	59874	Push Button Body
2.48	56941	Embossed Key White Ø 20.65 MM H.13.20 MM
2.52	59826	Hood Pressure Switch
2.58	63761	Contact Thermostat 90°C
3.01	59851	Filter
3.02	62434	External vacuum ring, 135 mm diameter
3.03	59859	Suction/Discharge Body Gasket LA40
3.04	59850	Suction/Discharge Body
3.05	59959	Gasket 40X29X1.5 MM
3.06	67489	DISPOSITIVE DVGW LA500 USA
3.08	60145	Boiler Purge Sleeve LA400
3.09	60003	BOILER E35/40 RESISTANT FLANGED

TEFCOLD®
COOL PRODUCTS WORLDWIDE

60018 / FAST 30

3.10	59943	Tube
3.11	59754	Pressure Tube TP 10X16 (sold by meters)
3.18	60038	Union Tube
3.19	59811	Pipe Fitting 400F
3.20	59836	Collector
3.22	60146	Suction Sleeve LA350
3.24	59839	Rinse aid dispenser
3.25	60130	Tube
3.26	59748	Filter with Stainless Steel Weight Tube Ø4x6mm
3.27	69135	Cuff
3.28	59980	Pressure Tube Ø 5X11 MM (by meters)
3.30	59823	Sleeve
3.32	59825	Overflow LA400
3.33	59736	Gasket
6.01	59811	Pipe Fitting 400F
6.02	63744	Seal Ring
6.04	63805	Flat Gasket Ø 33x16.5 MM
6.05	60083	Fixed Fitting Nut 12X16 MM
6.11	60143	Rinse Arm
6.13	59733	Fixed Duct Ferrule
6.14	62436	Duct seal
7.01	59847	LA350 PUMP
7.02	60047	Electric capacitor
7.04	60135	Mechanical Seal D. 26x13x5.5 BR.
7.05	60134	Mechanical Seal D. 26x13x5.5 BR.
7.06	60142	Rotor for Electropump 50Hz
7.07	60141	Spiral for Electropump

2026-01-16

TEFCOLD
COOL PRODUCTS WORLDWIDE

60018 / FAST 30

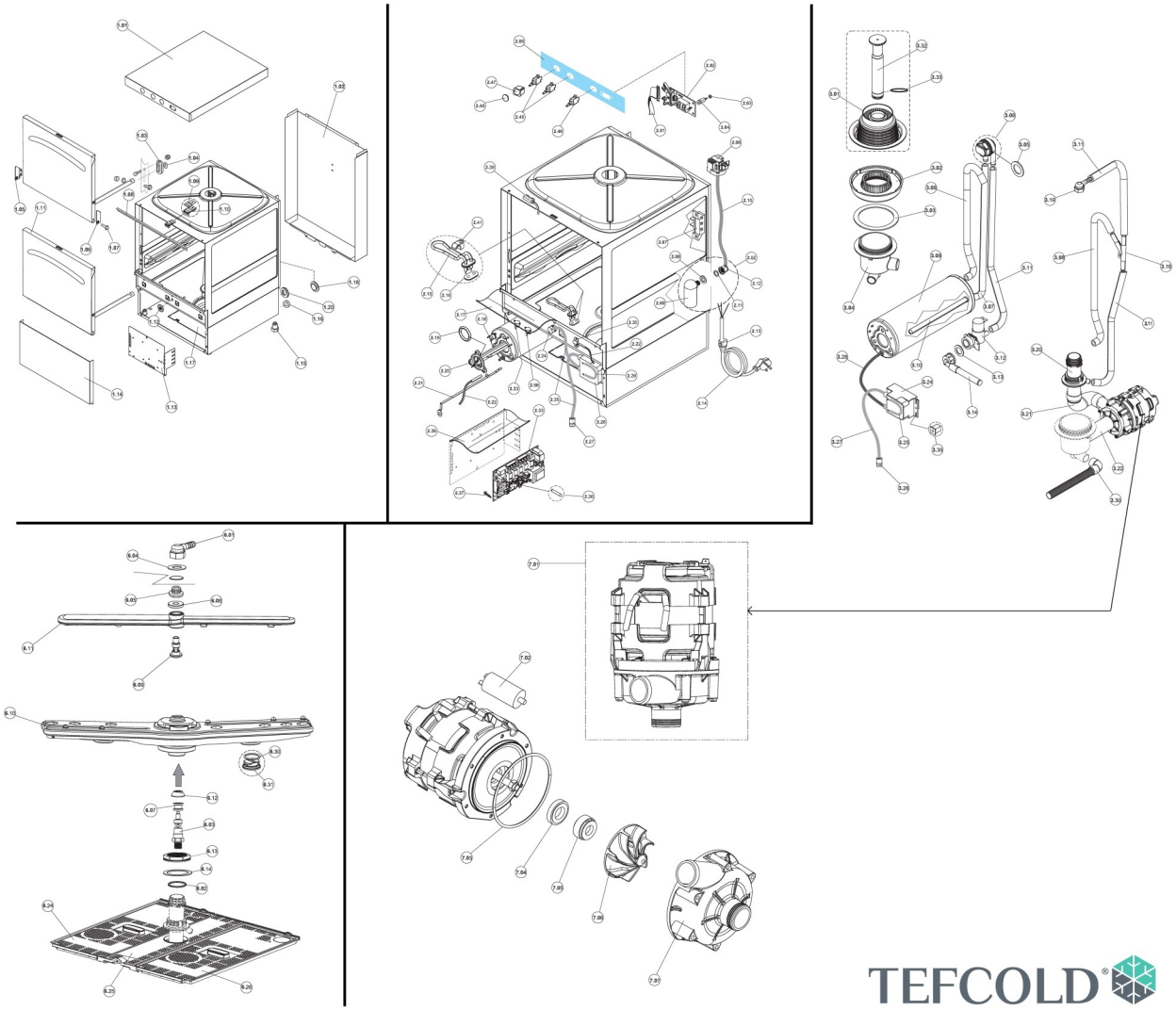

TEFCOLD