TECHNICAL FILE **2023** elettrobar
Viale Europa, 24 - 37045 S.Pietro Di Legnago (Vr) - Italy

Model	Ocean 31D
Code Production	917418

Interface :





	Overall Dimension (Width-Depth-Height) *open	mm	401x490(765*)x595
	Packaging Dimension (WxDxH)	mm	560x470x740
	Gross weight	Kg	30
	Net weight	Kg	27
	Volume	mc	0,19
	Rack size	mm	350x350
	Max door /hood opening	mm	260
	Max glasses/plate Height	mm	250
	General construction		single skin
	Door/hood Construction		double skin
	Tank construction		welded
	Tank volume	liter	7
	Tank heating element	W	600
	Tank surface strainers		Yes-composite
	Wash pump type		single flow
	Wash pump power	W	150
	Wash temperature	°C	60
	Boiler type		pressurized
	Boiler volume	liter	2,6
	Back-flow system		valve
	Boiler heating element	W	2.600
	Rinse booster pump		NO
	Rinse booster pump power	W	-
	Rinse temperature	°C	65
	Rinse water consumption	Liter /rack	1,6
	Optimal external water pressure	bar	2 - 4
	Drain system		overflow
	Drain filter		double filtering
	Drain pump		optional
	Rinse aid dispenser	peristaltic	YES
	Detergent dispenser	peristaltic	YES
	Wash cycle	sec	90 - 120 - 150
	Special cycle	programs	2
	Self cleaning cycle		YES
	Electric Power	W	3.500
	Electric Connection	V - ph - Hz	230V 1N 50Hz
	Fuse	A	16
	Water softner		NO
	Plates racks	n°-	NO
	Flat Rack	n°2	780138
	Support for saucers	n°-	NO
	Cutterly Rack	n°1	780139
	Electric cable	n°1	YES
	Drain hose	n°1	YES
	Fill hose	n°1	YES

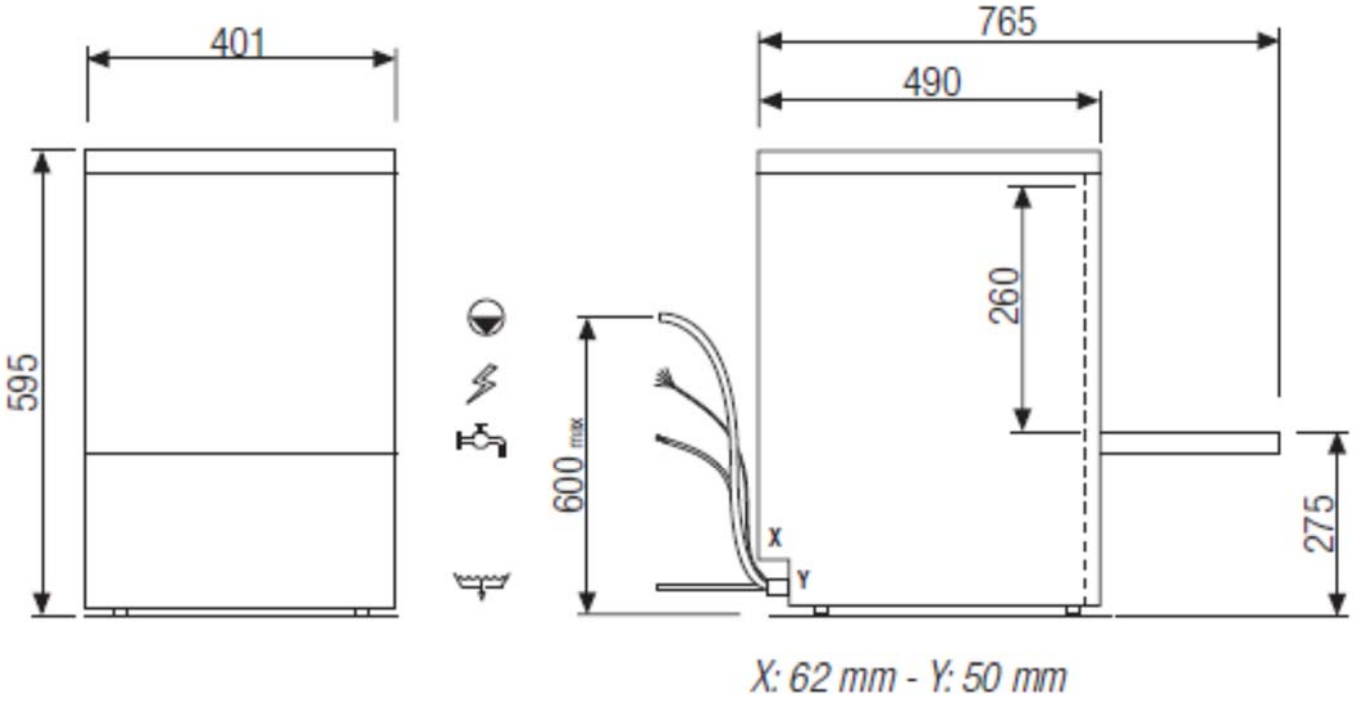

X: 62 mm - Y: 50 mm