TEFCOLD®
COOL PRODUCTS WORLDWIDE

43816 / Galaxy+ GP20FGD Black

Position	ItemNo	Description
001	44850	Panoramic end wall left d:740mm h:2005 mm Black
	44851	Panoramic end wall right d:740mm h:2005 mm Black
002	44854	Panoramic end wall glass h:2005 mm
003	42199	LED Tube T8 L=1200mm 20W
	44855	Canopy T8 led tube 1200 mm OSRAM red color
004	44857	Top back panel 938mm H: 2005 Black
005	42338	Shelf LED Kit SS 938mm
	42341	Shelf LED Bar 4000K 938mm
	42342	Shelf LED Bar Red 938mm
006	43921	Hook for Pin Bar
007	44867	938 mm supporting bar for hook and hanging profile
008	44865	Hanging profile 400 mm
009	44868	Shelf 400 mm plexi divider d:740
010	44869	Shelf 400mm d:740 w:938 Black
011	44953	Shelf Bracket 400mm Black
012	44031	Shelf Riser Plexi 938
013	51401	Plastic Shelf Ticket Strip Clip
	67386	Shelf Price Tag Holder w/ Bracket L=938
014	44882	Bottom back panel 938 mm Black
015	44886	Base deck for d:740 w:938 mm module Black
016	44891	Air return grill 1875 mm module Black
017	42153	Adjustable Feet
018	44956	Front panel for 1875 mm module Black
019	52835	Machinery front panel for 1875 mm module Black
020	44912	Base deck plexi divider 320 mm d:740
021	44962	Door bottom hinge left
	44963	Door bottom hinge right
023	44914	Plexi glass cover for Bottom grill
024	44964	Vertical Door LED 4000 K H:2005 Right/Left Black
	44965	Vertical door led light red color h:2005- each
025	45365	Door Handle Long Black
	73700	Door Handle Short Black
027	44915	Blok end wall left d:740mm h:2005 mm Black
	44916	Blok end wall right d:740mm h:2005 mm Black
028	44919	Blok end wall inside mirror left d:740 h:2005 mm Black
029	44966	Top Hinge – Old Version
030	45335	Door with transperant spacer h: 2005 Right 938 and 1875mm Black
	45336	Door with transperant spacer h: 2005 Left 938 and 1875mm Black
032	44994	Canopy Trim 1875mm Black
090	82054	Plexi Divider Foot
A1	44975	1875 module evaporator
A10	42260	Digital Controller XR20CH
A11	42201	Switch On/Off
A12	42201	Switch On/Off
A13	43210	Capillary tubes
	44979	Capillary for 1875 and 2500 module Ø1,2 mm L:152 cm
A2	45252	Evap Fan
A3	44932	Compressor Embraco NT6224U (with terminal box) module for 1875 mm
A4	42233	Condenser Fan Motor Reversible
A5	42220	Condenser
A6	44933	Copper drier 50 gr
A7	44978	Electrical connection box
A8	42215	Water Tray Heater
A9	42212	Sponge Cloth

2026-10-15

TEFCOLD
COOL PRODUCTS WORLDWIDE

43816 / Galaxy+ GP20FGD Black

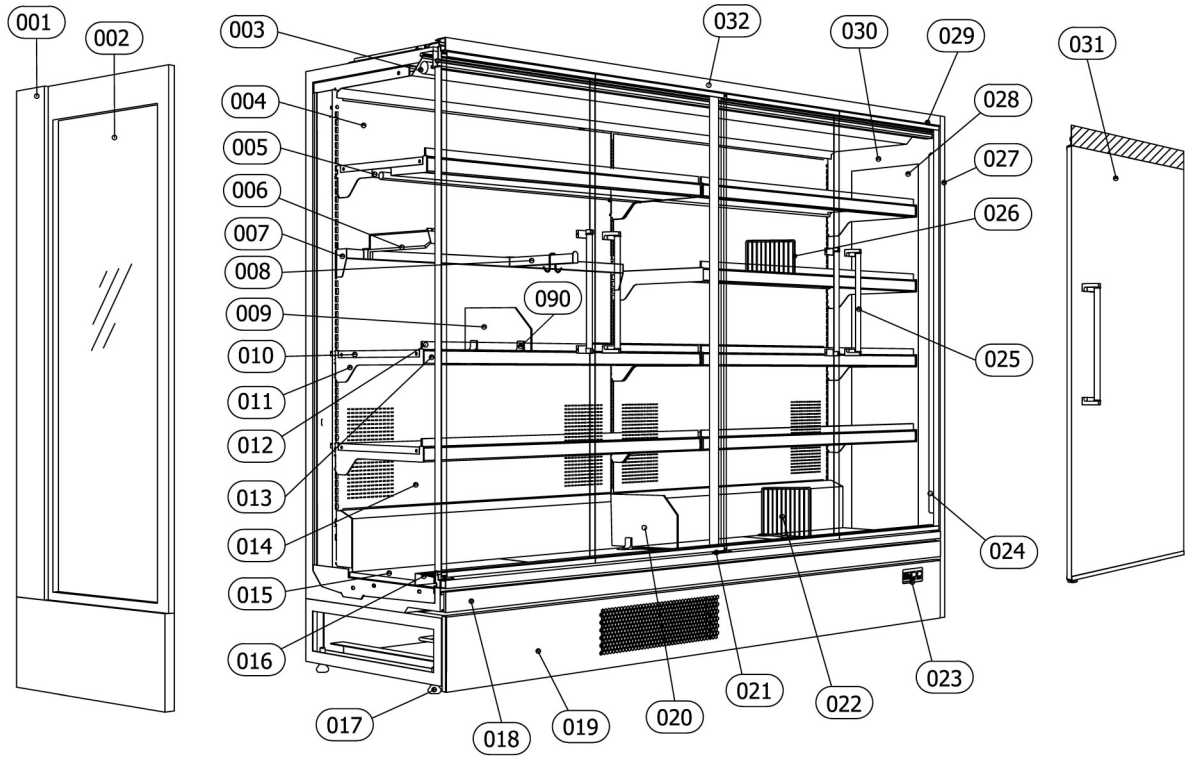

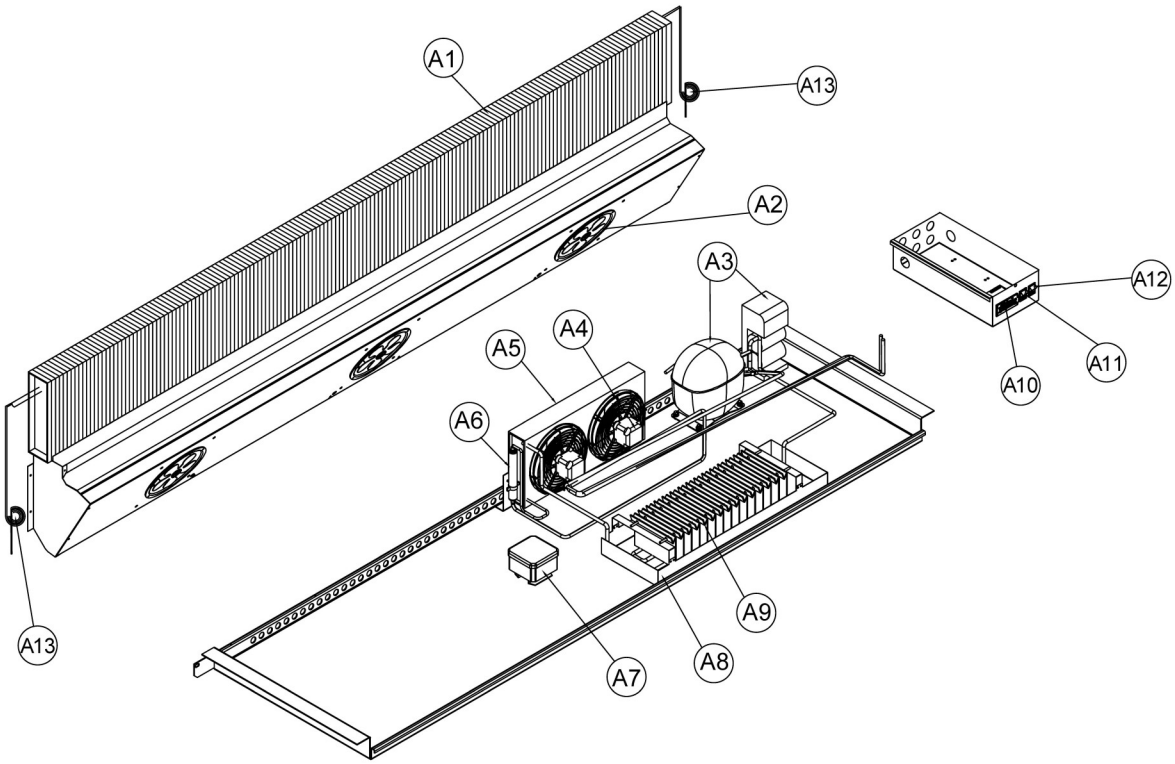

TEFCOLD