TEFCOLD®
COOL PRODUCTS WORLDWIDE

16498 / VK33-120

Position	ItemNo	Description
00	10513	Complete Glass With Fixing
01	14579	Feet M8
02	10499	Clips Glass Cover
04	10621	Side Glass
05	35045	Bushing
06	35046	Glass Fixed Bolt
07	35047	Glass Linked Clip
08	35048	Glass Clip Fixed Nut
09	35049	Top Glass
10	35066	Front Glass
11	11870	Unit Room Cover For Compressor
12	54741	Filter Drier
13	13237	Defrost Water Coil
14	14193	Condensor
15	10068	Plastic Cap
16	11621	Unit Side
17	32629	Plug
20	13318	Cond./Evap. Fan Rah1238B
21	11725	Compressor HDL100A R600A
	11726	Compressor HDL140A R600
	11734	Compressor HXD55AA R600A
23	13754	Main Switch
24	14061	Thermostat XR02CX 2 Probes
26	14768	Divider For GN1/4 Pans 268x27 mm
27	14771	Divider For GN1/6 Pans 178x76 mm
28	10020	Filter 182 x 215 mm
29	10017	Dust Filter Cover
30	10039	Cover For Screw
31	13896	Probe NTC Dixell/Carel 10 Kohm

2026-05-29

TEFCOLD
COOL PRODUCTS WORLDWIDE

16498 / VK33-120

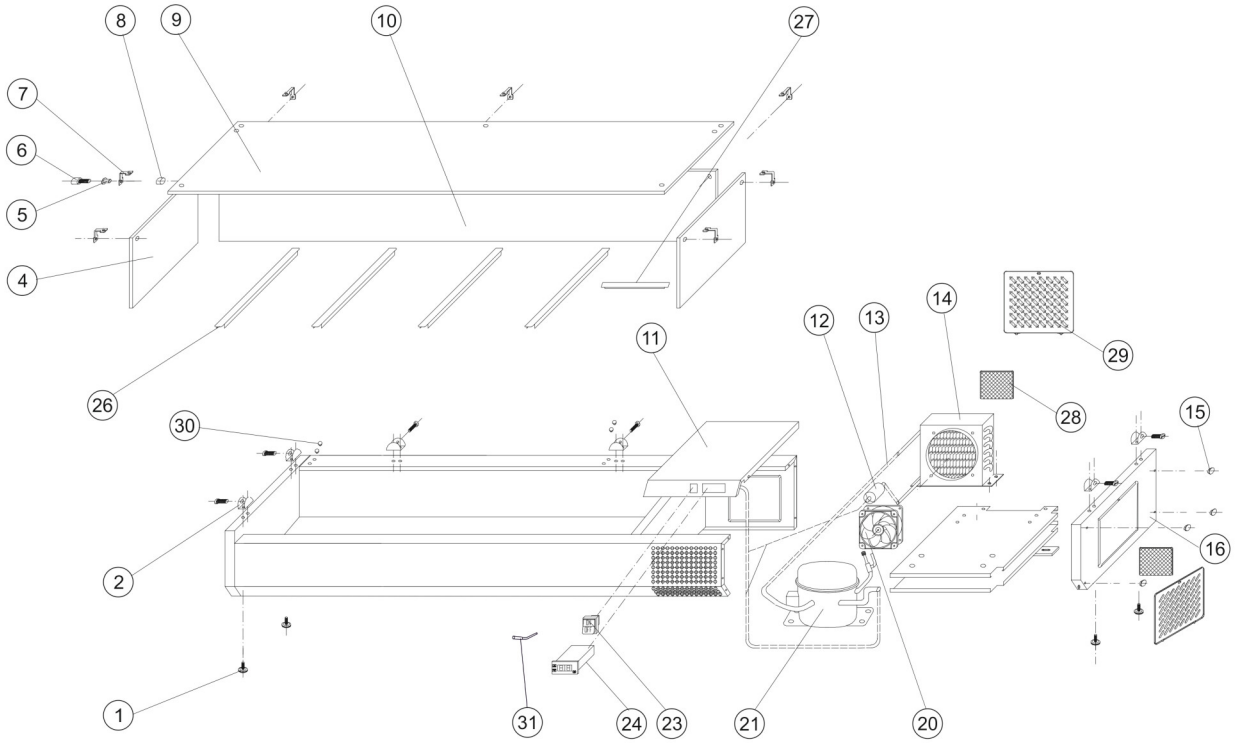

VK33-nnn