TEFCOLD®
COOL PRODUCTS WORLDWIDE

31584 / CEV425WLCPD1 - Esta

Position	ItemNo	Description
01	12911	Pin For Hinge
02	14079	Condenser
03	14199	Holder For Condenser 2015
04	13632	Cover For Wiring
05	10483	Top Cover White
06	10221	Canopy Base Black
07	12961	Top Hinge Base Left/Right
08	15629	LED Power Supply 12 V 35 W
09	15650	LED Strip 580 mm 7000K/7LM
10	10318	Left/Right Side Cover Canopy
11	10308	Cover For Canopy Opal
13	15515	Holder For LED Strip
14	13737	Light Switch
15	13644	Green Control Lamp
17	13531	Fan Motor Int/Ext
18	13390	Cover For Internal Fan
19	13998	Thermostat K50B-S16176 R600
20	14023	Thermostat Knob FS
21	13790	Thermometer Analog Black 1.2M
	33379	Digital Thermometer w/Black Frame
24	15643	LED Strip 1464 mm For Door
25	14488	Roll Bond Evaporator White
26	15207	Wire Shelf 490x360 Black
	15208	Wire Shelf 395x370 White
	15215	Wire Shelf For Print 490x360 Black
	15228	Wire Shelf For Print 490x360 White
27	12852	Bottom Hinge Right
28	12786	Bushing For Hinge With Wires
29	11341	Ventilation Grill Bottom Black
30	11243	Cover For Screw
31	11121	Grill Cover For Comp. Compart.
32	14198	Fixing Clamp For Condenser
33	11470	Drip Tray
34	14614	Pin For Big Roller
35	14608	Big Roller
36	33343	Compressor TT1117GY R600a
37	14570	Adjustable Foot
39	15721	Filter Drier 20 G
40	11442	Drain Pipe
41	12700	Handle Curved Black
43	10721	Lock With Keys
46	12064	Door Gasket Black 585x1620
48	11979	Door Complete With 2 LED
	12133	Door Reversible With 2 LED
49	12909	Pin Bottom Hinge For Wires R Gold
64	16744	Bottom Hinge Pin For Wires Left
65	12755	Bottom Hinge For Wires Left
80	52599	Thermostat Cover

2025-12-16

TEFCOLD
COOL PRODUCTS WORLDWIDE

31584 / CEV425WLCPD1 - Esta

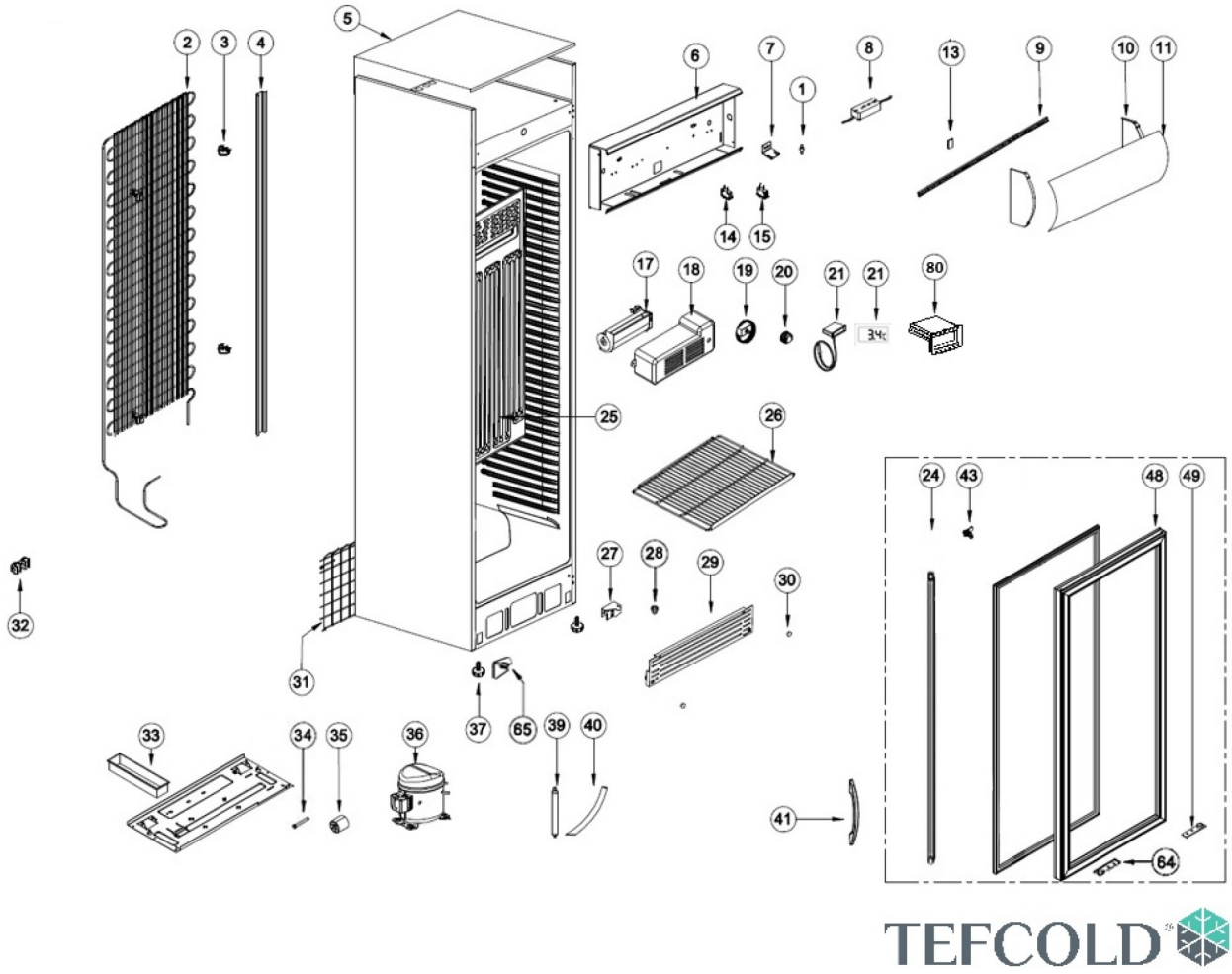

TEFCOLD