TEFCOLD®
COOL PRODUCTS WORLDWIDE

43818 / Galaxy+ GP26FGD Black

Position	ItemNo	Description
001	44850	Panoramic end wall left d:740mm h:2005 mm Black
	44851	Panoramic end wall right d:740mm h:2005 mm Black
002	44854	Panoramic end wall glass h:2005 mm
003	42199	LED Tube T8 L=1200mm 20W
	44855	Canopy T8 led tube 1200 mm OSRAM red color
004	44859	Top back panel 1250mm H: 2005 Black
005	42339	Shelf LED Bar 4000K 1250mm
	42340	Shelf LED Bar Red 1250mm
006	43921	Hook for Pin Bar
007	44866	1250 mm supporting bar for hook and hanging profile
008	44865	Hanging profile 400 mm
009	44868	Shelf 400 mm plexi divider d:740
010	44733	Shelf 400mm d:880 w:1250 Black
011	44953	Shelf Bracket 400mm Black
012	44032	Shelf Riser Plexi 1250
013	51401	Plastic Shelf Ticket Strip Clip
	67388	Shelf Price Tag Holder w/ Bracket L=1250
014	44883	Bottom back panel 1250 mm Black
015	44887	Base deck for d:740 w:1250 mm module Black
016	44892	Air return grill 1250 mm module Black
017	42153	Adjustable Feet
018	44957	Front panel for 2500 mm module Black
019	44961	Machinery front panel for 2500 mm module Black
020	44912	Base deck plexi divider 320 mm d:740
021	44962	Door bottom hinge left
	44963	Door bottom hinge right
023	44914	Plexi glass cover for Bottom grill
024	44964	Vertical Door LED 4000 K H:2005 Right/Left Black
	44965	Vertical door led light red color h:2005- each
025	45365	Door Handle Long Black
	73700	Door Handle Short Black
027	44915	Blok end wall left d:740mm h:2005 mm Black
	44916	Blok end wall right d:740mm h:2005 mm Black
028	44919	Blok end wall inside mirror left d:740 h:2005 mm Black
029	44966	Top Hinge – Old Version
030	44969	Door with transperant spacer h: 2005 Right 1250 and 2500mm Black
	44970	Door with transperant spacer h: 2005 Left 1250 and 2500mm Black
032	44995	Canopy Trim 2500mm Black
090	82054	Plexi Divider Foot
A1	44976	2500 module evaporator(SINGLE)
	44977	2500 module evaporator(TWIN)
A10	42260	Digital Controller XR20CH
A11	42201	Switch On/Off
A12	42201	Switch On/Off
A13	44979	Capillary for 1875 and 2500 module Ø1,2 mm L:152 cm
A2	45252	Evap Fan
A3	44932	Compressor Embraco NT6224U (with terminal box) module for 1875 mm
A4	42233	Condenser Fan Motor Reversible
A5	42220	Condenser
A6	44933	Copper drier 50 gr
A7	44978	Electrical connection box
A8	42215	Water Tray Heater
A9	42212	Sponge Cloth

2026-10-15

TEFCOLD
COOL PRODUCTS WORLDWIDE

43818 / Galaxy+ GP26FGD Black

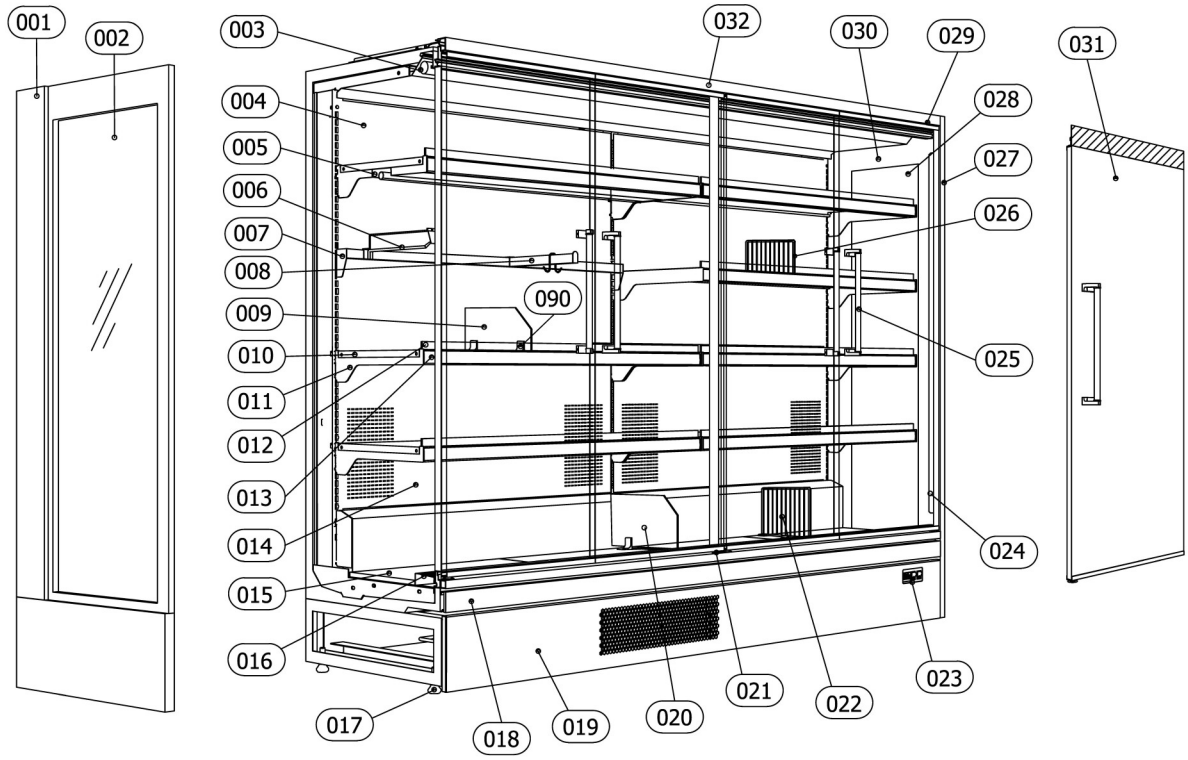

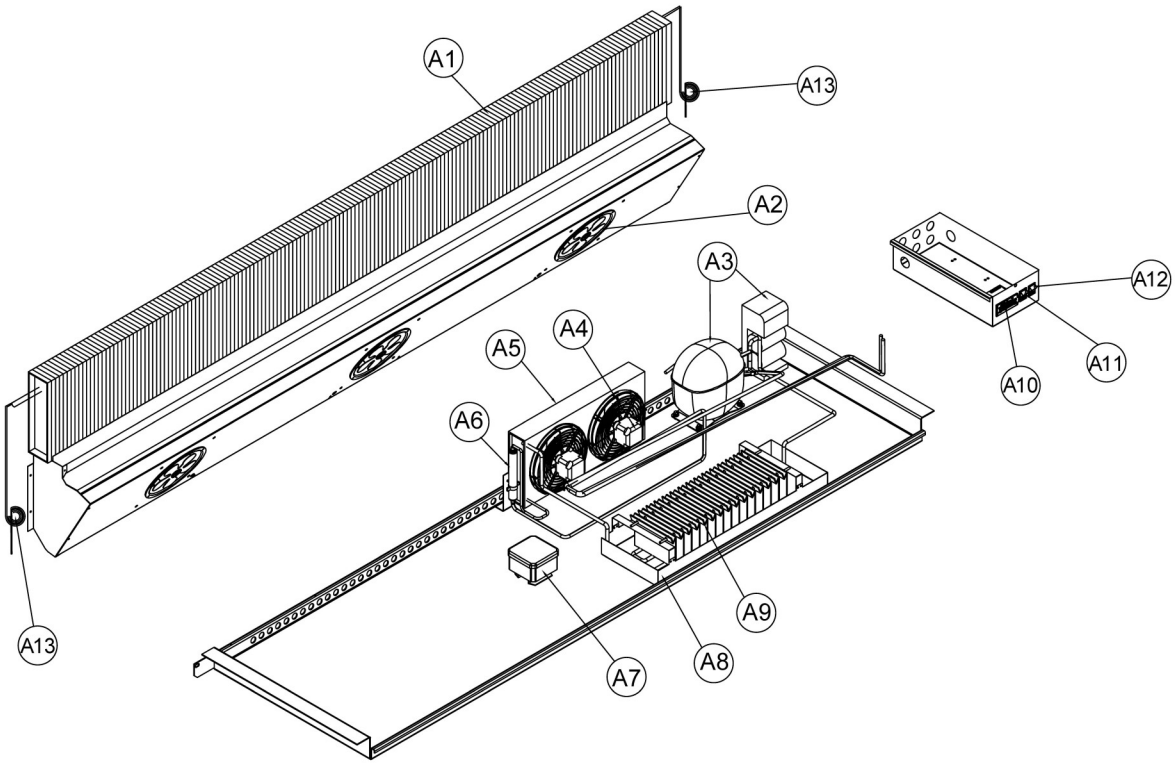

TEFCOLD